LET	ALTERATION	DATE	BY	LET	ALTERATION	DATE	BY
				V	TRACED NO WT. CHG.	9-17-63	PAIRE
				W	IN 0/A & 0/1B -4 & (8) REQ.		
					WAS (8) REVISED 27102-10		
					(2 REQ) & 07102-3 (4 REQ)		
					IN -14 & -15 SUB ASSY		
					07102-10 (2 REQ) WAS 07102-3		
					(8 REQ) AN960-D-10 (EA) WAS		
					(8 REQ) IN GENERAL 0/A		
					IN -14 & -15 SUB. ASSY. 07102-10		
					WAS (8) REQ 27102-10, 2 REQ WT CHANGE	9-17-63	PAIRE
				X	-18 .188 × 1 1/8 × 7 1/8 REQ.		
					AL. AL. WAS .125 × 1 1/8 × 7 1/8		
					17S-T AL. AL. WT. CHG. REQ.	9-17-63	PAIRE

ASS'Y. 28F1495-11 R.H. SHOWN HERE-10 L.H. OPP.

ASS'Y. 28F1495-13 R.H. SHOWN HERE-L.H. OPP.

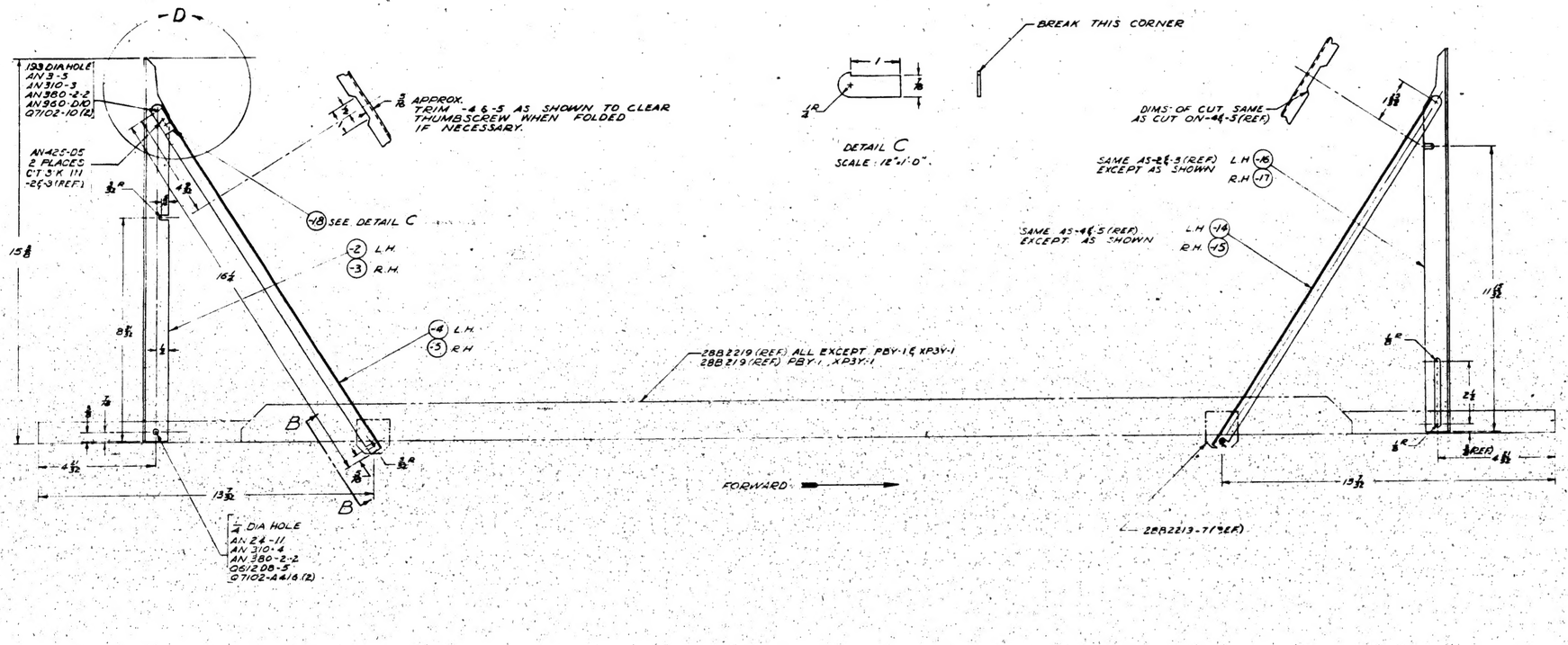

07102-10						2	
AN960-D10						1	
AN425-D6							
AN425-D5						1	
AN380-2-2						1	
AN310-3						1	
AN3-5						1	
-18	.125 × 3/8 × 1 3/8	AL. AL. SHT	QQ-A-355-T			1	
-17	.188 × 1 1/8	AL. AL. EXT	24S-T			1	
-16	1.188 × 1 1/8	AL. AL. EXT	24S-T			1	
-7	10-24 × 1/2 (PARKER-KALON TYPE)					1	
-6R	.125 × 7 1/8 × 3	C.R. SHT	AN-QQ-S-635			1	
-15	SUB-ASSY						
07102-10						2	
AN960-D10						1	
AN425-D6							
AN425-D5						1	
AN380-2-2						1	
AN310-3						1	
AN3-5						1	
-18	.125 × 3/8 × 1 3/8	AL. AL. SHT	QQ-A-355-T			1	
-16	.188 × 1 1/8	AL. AL. EXT	24S-T			1	
-14	1.188 × 1 1/8	AL. AL. EXT	24S-T			1	
-7	10-24 × 1/2 (PARKER-KALON TYPE)					1	
-6L	.125 × 7 1/8 × 3	C.R. SHT	AN-QQ-S-635			1	
-12	SUB-ASSY						
27102-10						2	
AN960-D10						1	
AN425-D6							
AN425-D5						1	
AN380-2-2						1	
AN310-3						1	
AN3-5						1	
-18	.125 × 3/8 × 1 3/8	AL. AL. SHT	QQ-A-355-T			1	
-7	10-24 × 1/2 (PARKER-KALON TYPE)					1	
-6R	.125 × 7 1/8 × 3	C.R. SHT	AN-QQ-S-635			1	
-4	.188 × 1 1/8	AL. AL. EXT	24S-T			1	
-2	.188 × 1 1/8	AL. AL. EXT	24S-T			1	
-11	SUB-ASSY						
07102-10						2	
AN960-D10						1	
AN425-D6							
AN425-D5							
AN380-2-2						1	
AN310-3						1	
AN3-5						1	
-18	.125 × 3/8 × 1 3/8	AL. AL. SHT	QQ-A-355-T			1	
-7	10-24 × 1/2 (PARKER-KALON TYPE)					1	
-6L	.125 × 7 1/8 × 3	C.R. SHT	AN-QQ-S-635			1	
-4	.188 × 1 1/8	AL. AL. EXT	24S-T			1	
-2	.188 × 1 1/8	AL. AL. EXT	24S-T			1	
-10	SUB-ASSY						
07102-4 & 16						8	8
24-11-08-5						4	4
28-5AHN	1N8237/8					1	
28-2UNC	1N8237/8						
28-5NN	1N8237/8						
28-5UZ	1N8237/8						
28-5NC	1N8237/8						
28-5NA	1N8237/8						
FAT-3A	1N8237/8						
FAT-5A	1N8237/8						
FAT-5	1N8237/8						
FAT-3	1N8237/8						
FAT-2	1N8237/8						
FAT-4	1N8237/8						
FAT-6	1N8237/8						
FAT-7	1N8237/8						
FAT-8	1N8237/8						
AN960-D10						4	4
AN380-2-2						4	4
AN310-4						4	4
AN24-11						4	4
-8	10-32 × 1/2 (PARKER-KALON TYPE)					4	4
-13	SUB-ASSY					1	
-12	SUB-ASSY					1	
-11	SUB-ASSY					1	1
-10	SUB-ASSY					1	1

PART NO.	STOCK	MATERIAL	SPEC.	LIST REQ.	LIST REQ.	LIST REQ.	LIST REQ.	LIST REQ.	LIST REQ.
	PARTS LIST PER ASSY.			-8	-9				

AS	NOTED	7-10-63	TH-HD ALUM	RIV.
MAT'L NONE		DRAFT		A.L.W.
HEAT TREAT	FINISH	GROUP	GROUP	MAT	APPROVED	DATE

NAME BRACKET-FURN. WORK PLATFORM-CROSSWALK

OPP. HAND

SIZE J 28F1495

CONSOLIDATED VULTEE AIRCRAFT CORP. SAN DIEGO DIVISION ... SAN DIEGO, CALIF.

NOTE:
1- ALL BOLTS SCREWS ETC. TO BE INSTALLED AT ASSY EXCEPT AN 3-5, AN 310-3, AN 380-2-2 & AN 425-D5.

2- INSERT FABRIC IMPREGNATED WITH BITUMATIC PAINT BETWEEN -2, -3 & -6

3- CUT BACK ALL OUTSTANDING LEGS OF ANGLES 27° - 45° MAX.

4- L.H. ASSEM. FORWARD - 28F1495-12 (REF)
R.H. ASSEM. FORWARD - 28F1495-13 (REF)
L.H. ASSEM. REAR - 28F1495-10 (REF)
R.H. ASSEM. REAR - 28F1495-11 (REF)

FINISH NOTE:
FINISH -2, -3, -4, -5, -14, -15, -16, -17, -18, Z.P.-2-GP
FINISH -6 C-P-2GP
FINISH -7 & -8 C.

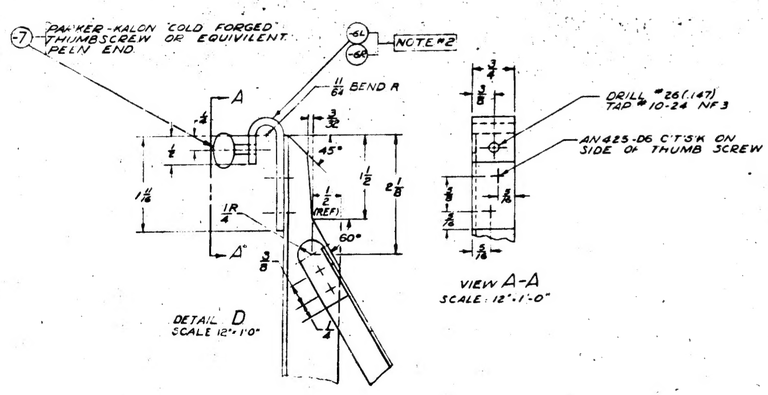

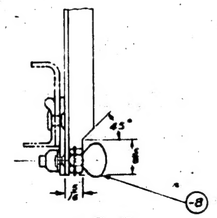

PARKER-KALON 'COLD FORGED' THUMBSCREW AN 315-3R(2) FACE SCREWHEAD TO FIT AN 960-316 WASHER - TAKE NUTS UP TIGHT AGAINST SCREWHEAD - STAKE NUTS TO SCREW 3 PLACES. INSERT SCREW INTO STOP NUT - PEEN END OVER WELL. ATTACH STOPNUT BEFORE ASSY TO CROSSWALK

FINISH CODE	
Z	ZINC CHROMATE
P	PAINT
G.P.	GREEN PRIMER
C	ALUMINUM PLATE

H 285

28F1495 R